Product Datasheet

Single-port Gigabit PoE Injector

(ONV-PSE3301AC)



OVERVIEW

The ONV-PSE3301AC is a Gigabit PoE injector independently developed by ONV. It has 1*10/100/1000M RJ45 port, supports IEEE802.3af/at PoE standard, and single-port PoE power reaches 30W. As a PoE power supply device, it can automatically detect and identify compliant powered devices and supply power to them via a network cable. It can power PoE terminal devices such as wireless APs, IP cameras, VoIP phones, and video intercoms via network cable, meeting the needs of network environments requiring high-density PoE power supply. It is suitable for hotels, campuses, parks, scenic spots, shopping malls, factory dormitories, and small and medium-sized enterprises to build cost-effective networks. Plug and play, no configuration, simple and convenient to use.

FEATURE

■ Gigabit access (1 input and 1 output)

◇ Support non-blocking wire-speed forwarding.

◇ Use input and 1 output connection method, with 1*10/100/1000M RJ45 port, making it easy to connect and maintain.

■ Smart PoE power supply

◇ 1*10/100/1000Base-T RJ45 port support PoE power, meeting the needs of security monitoring, teleconferencing system, wireless coverage, and other scenarios.

◇ IEEE 802.3af/at PoE standard, without damaging non-PoE devices.

■ Stable and reliable

◇ CE, FCC, RoHS.

◇ Support desktop and wall-mounted installation.

◇ Plug and play, no configuration, simple and convenient.

◇ The user-friendly panel can show the device status through the LED indicator of PWR, PoE.

◇ Low power consumption, no fan design, the flame-retardant plastic shell is exquisite and beautiful.

◇ Self-developed power supply, high redundancy design, providing a long-term and stable PoE power output.

TECHNICAL SPECIFICATION

Model	ONV-PSE3301AC	ONV-PSE3301AC-at
Interface Characteristics		
Fixed Port	1*10/100/1000M PoE port (Data/Power) 1*10/100/1000M uplink RJ45 port (Data)	
Ethernet Port	10/100/1000Base-T auto-sensing, full/half duplex MDI/MDI-X self-adaptation	
Twisted Pair Transmission	10BASE-T:Cat3,4,5 UTP(≤100 meter) 100BASE-TX:Cat5 or later UTP(≤100 meter) 1000BASE-T:Cat5e or later UTP(≤100 meter)	
Network Protocol and Indicator		
Network Protocol	IEEE802.3 10BASE-T, IEEE802.3i 10Base-T IEEE802.3u 100Base-TX, IEEE802.3ab 1000Base-T, IEEE802.3	
LED Indicator	Power: PWR (Green), POE: PoE (Green)	
PoE & Power Supply		

PoE Port	1 port support PoE	
Power Supply Pin	Default 1/2(+)3/6 (-), optional 4/5(+)7/8(-)	
Max Power Per Port	30W, IEEE802.3af/at	
Total PWR/ Input Voltage	18W /(AC100-240V)	35W /(AC100-240V)
Power Consumption	Standby<3W, Full load<15W	Standby<3W, Full load<30W
Configure Power	N/A, AC100-240V 50-60Hz 0.5A	
Physical Parameter		
Operation TEMP/ Humidity	-20~+55°C, 5%~90% RH Non-condensing	
Storage TEMP/ Humidity	-40~+80°C, 5%~95% RH Non-condensing	
Dimension (L*W*H)	119.2*53*33mm	119.4*61.8*38mm
Net /Gross Weight	0.2kg /0.4kg	
Installation	Desktop	
Certification& Warranty		
Lightning Protection	Port lightning protection: 4KV 8/20us, Protection level: IP30	
Certification	CCC, CE mark, commercial, CE/LVD EN62368-1, FCC Part 15, RoHS	
Warranty	3 years, lifelong maintenance.	

DIMENSION

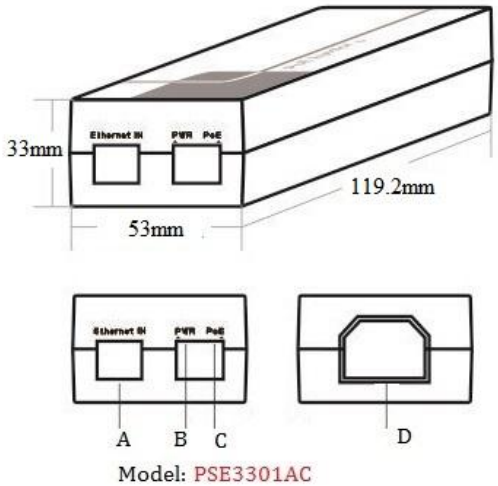

Model: PSE3301AC

A. RJ45 input port B. Working Led indicator

C. PoE output port D. Power input port AC100-240V,50/60Hz

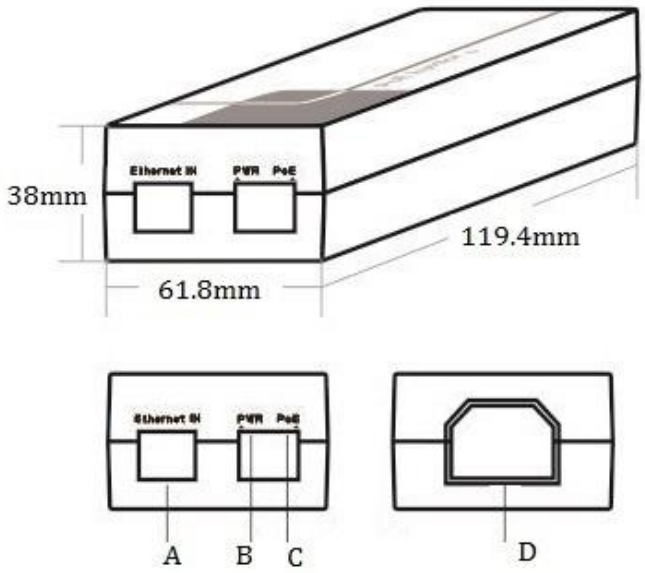

Model: PSE3301AC-at

A. RJ45 input port B. Working Led indicator

C. PoE output port D. Power input port AC100-240V,50/60Hz

APPLICATION

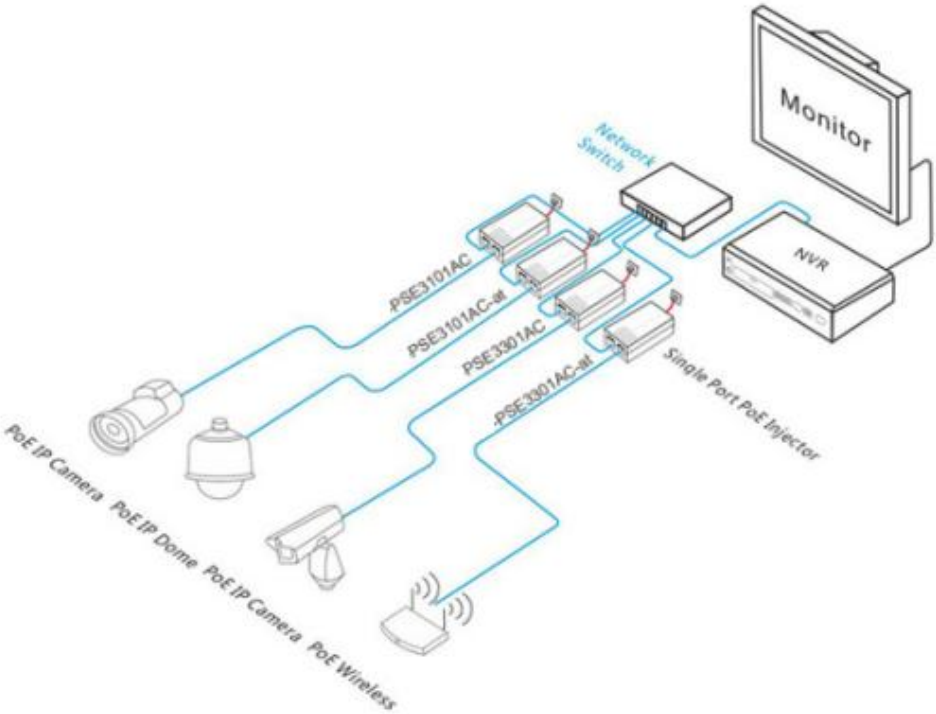

ORDERING INFORMATION

Model	Description	External Power Adapter
ONV-PSE3301AC	Single-port Gigabit PoE injector with 1*RJ45 port PoE output and 1*RJ45 input port. It support IEEE802.3af/at PoE standard. Support desktop installation.	18W
ONV-PSE3301AC-at		35W

PACKING LIST

	Content	Qty	Unit
Packing List	Single-port Gigabit PoE Injector	1	SET
	User Guide	1	PC
	Warranty Card	1	PC

CONTACT US

Optical Network Video Technologies (Shenzhen) Co., Ltd.

Tel: 0086-755-33376606

Fax: 0086-755-33376608

WeChat: ONV-PoE-IoT

Email: onv@onv.com.cn

\Website: www.onvcom.com, www.onvswitch.com

Headquarters: Room 10D03, Shenye Tairan Building, No. 8 Tairan Road, Tianan Community, Shatou Street, Futian District, Shenzhen

Factory: Building 3, Galaxy Artificial Intelligence Industrial Park, No.333 Zhongkai 6th Road, Chenjiang Street, Zhongkai High-tech Zone, Huizhou

